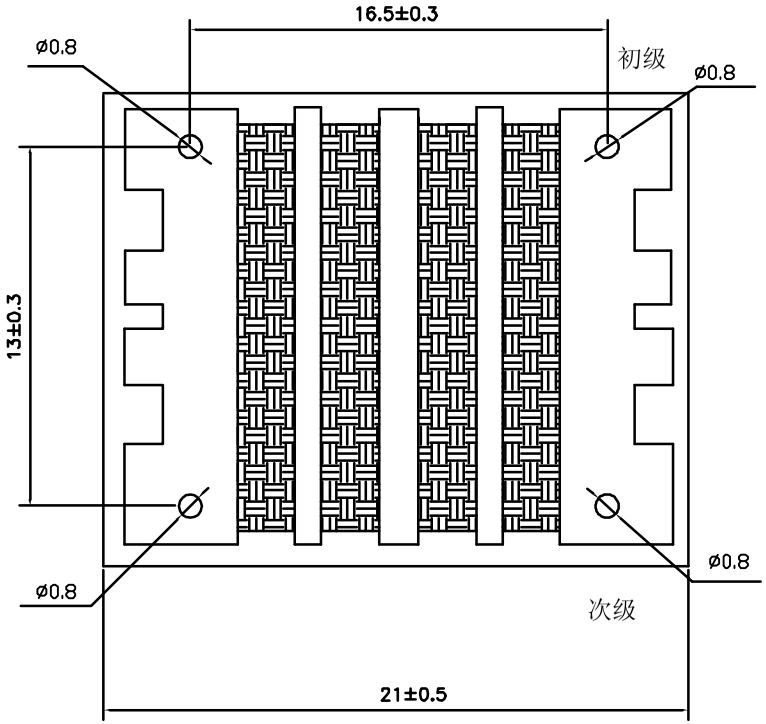

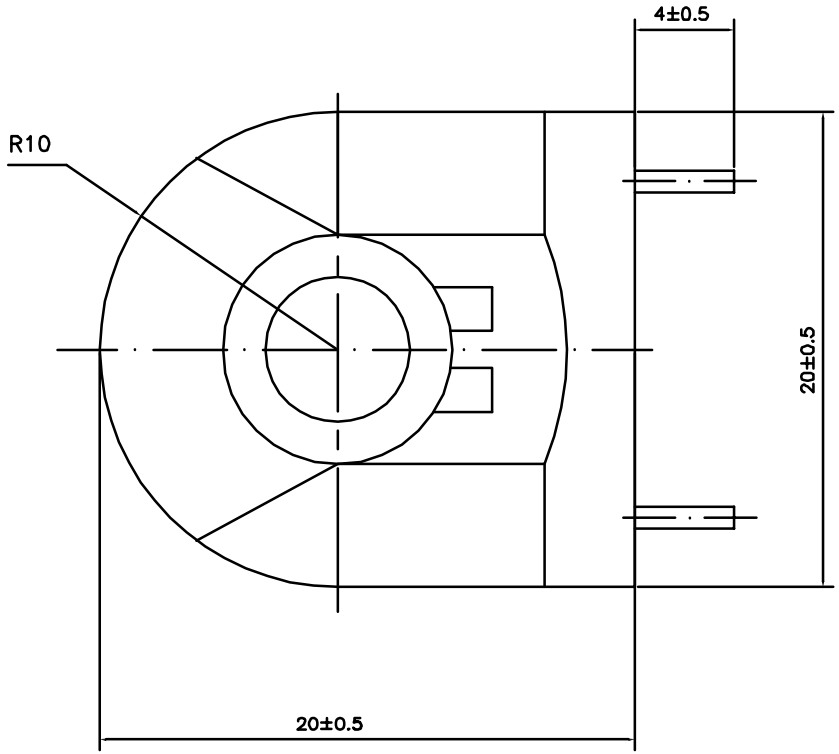

Features: Primary coil
features: 40T
R: 0.09 Ω % % p30 %
L: 20uH % % do %

Subprime: 4000T
R: Ω % % 2K p15 %
L: 650mH % % do %

The dielectric isolation:
23KV/mm Package temperature:
120 ℃ The input voltage: 1uF
capacitance change voltage 130V
Output voltage: 12-15KV
Ignition distance: > 6mm Using
temperature: - 20 ℃ - + 80 ℃

			PRODUCT			Material NO			NAME		
6			MATERIAL	THICKNESS	FINISH	UNIT	SCALE		DRAWING NO.		
5											
4					2011.03.05				PAGE	1	VERSIONS 1.0
3											
2			APPROVE		CHECK		DESIGN				
1											
	DATE	REVISE							GEI Inc.		