GEI INC.
301 E. Arrow Highway, Suite 108
San Dimas, CA 91773 USA
Telephone: (909) 592-2234
Fax: (909) 592-2231
www.gei-inc.com

Planar Transformers

HS-TP25F SERIES

High Frequency 140 Watts

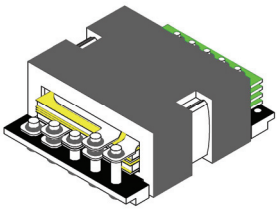

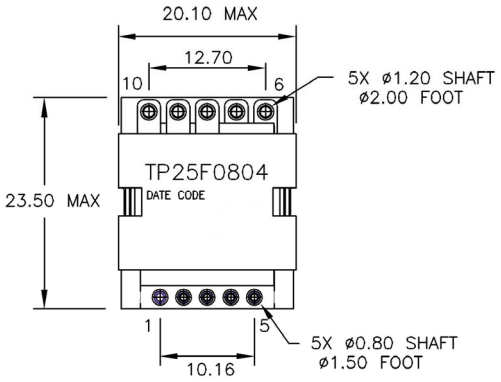

FEATURES

- Power Rating Up to 140 Watts
- High Efficiency
- High Power Density of 600 Watts Per Cubic Inch
- Footprint 23.5 mm X 20.10 mm
- Lower Profile of 9.12 mm
- High Isolation (operational) 1500 Vdc
- High Frequency 200 kHz – 700 kHz
- Operating Temperature -40° C to +125° C

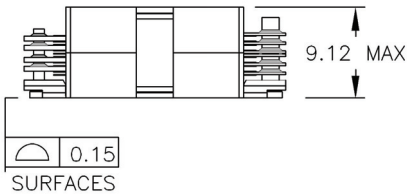

DESCRIPTION

The HS-TP25F series of planar transformers are optimised for power supplies of high performance DC/DC converters. Due to an optimised core, winding geometry and interleaving technology, they are able to offer a high efficiencies up to over 98 percent, high power density of 600 watts per cubic inch, but lower profile of 9.12 mm. The series are consisted of 15 part numbers. Adding a primary auxiliary winding or a small gap to transformers, they will be have more expanding of configurations. The series are intended for use of DC/DC converter supply with forward, full-bridge, half-bridge an and push – pull power supplies. Topologies in application with input voltages between 18 and 75 volts, and output voltages from 52 volts down to 1.0 volts.

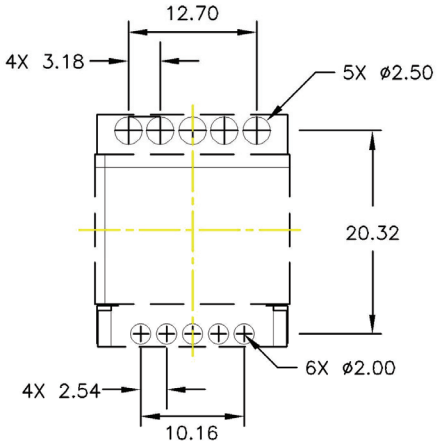

SUGGESTED PAD LAY–OUT

Weight……12.00 grams

Tape & Reel…..180/reel

Tray…….40/tray

HS-TP25F SERIES

High Frequency 140 Watts
Planar Transformers

GEI INC.
301 E. Arrow Highway, Suite 108
San Dimas, CA 91773 USA
Telephone: (909) 592-2234
Fax: (909) 592-2231
www.gei-inc.com

ELECTRICAL SPECIFICATIONS											
Part Number	Primary[1] Inductance (uH min.)	Leakage[2] Inductance (uH max.)	DC Resistance (m Ω Max)				Turns Ratio		primary Second Hi Pot	Figure	M. Height
			Primary			Secondary	Primary (A/B)	Secondary			
			A	B	AUX						
HSTP25F0802	161.0	0.43	18.0	18.0	N/A	0.5 & 0.5	4T/4T	1T & 1T	1500 (VDC)	A	
HSTP25F0902	204.0	0.43	18.0	20.0	N/A		4T/5T				
HSTP25F1002	252.0	0.45	20.0	20.0	N/A		5T/5T				
HSTP25F1102	304.0	0.55	20.0	26.0	N/A		5T/6T				
HSTP25F1202	362.0	0.60	26.0	26.0	N/A		6T/6T				
HSTP25F0803	161.0	0.43	18.0	18.0	N/A	1.0 & 1.0	4T/4T	2T & 1T	1500 (VDC)	B	
HSTP25F0903	204.0	0.43	18.0	20.0	N/A		4T/5T				
HSTP25F1003	252.0	0.45	20.0	20.0	N/A		5T/5T				
HSTP25F1103	304.0	0.55	20.0	26.0	N/A		5T/6T				
HSTP25F1203	362.0	0.60	26.0	26.0	N/A		6T/6T				
HSTP25F0804	161.0	0.43	18.0	18.0	N/A	4.00	4T/4T	4T (1T:1T:1T:1T)	1500 (VDC)	C	
HSTP25F0904	204.0	0.43	18.0	20.0	N/A		4T/5T				
HSTP25F1004	252.0	0.45	20.0	20.0	N/A		5T/5T				
HSTP25F1104	304.0	0.55	20.0	26.0	N/A		5T/6T				
HSTP25F1204	362.0	0.60	26.0	26.0	N/A		6T/6T				

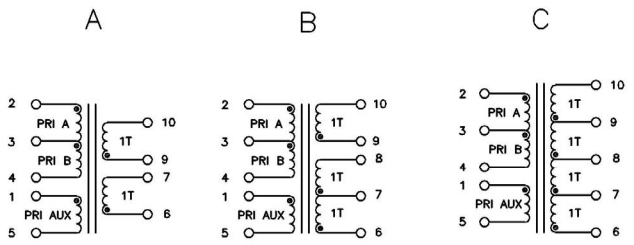

SCHEMATICS

NOTES:

1. The inductance is measured on HP4284 between pins 2 - 4 at 100 kHz, 100 mVrms, 0 Adc.
2. The leakage inductance is measured between pins 2 - 4 with all other winding shorted.
3. All specifications typical at T_A=25° C.